Room ID

iNFINITY Series Sign Frame with Removable Clear cover Landscape

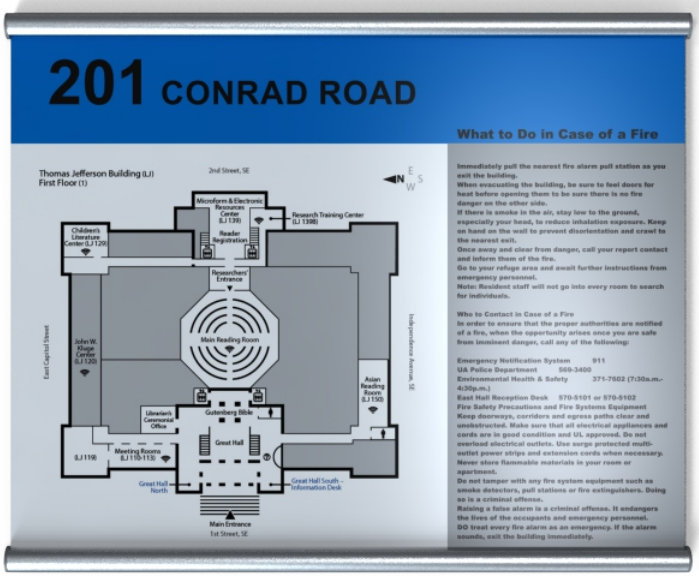

Description:
Room ID with easy change over graphics.
Available in either portrait or landscape orientation. Landscape Shown here.
Frames sold assembled but without graphics.
Braille & tactile available on frames larger than our IN120.

Details:
Aluminum sign frame, non glare clear cover with side mounted end caps.
Convenient mounting holes for instillation on all frames larger than 144 square inches. (12" x 12").
Clear and black anodized frames with grey or black plastic end caps available. IN40 - IN600.
Available with d/s tape upon request.

Dimensions:
Infinity frame widths available: IN40, IN60, IN80, IN100, IN120, IN150, IN200, IN-Letter, IN11, IN300, IN14, IN400, IN17, IN500, IN22, IN600.
Heights available: 3" - 96".

Extensia International Systems Inc.
PH 1.866.275.1996 EMAIL sales@extensiasign.com ADDRESS 41 Proton Street S., P.O. Box 760, Dundalk, ON., N0C 1B0
www.extensiasign.com

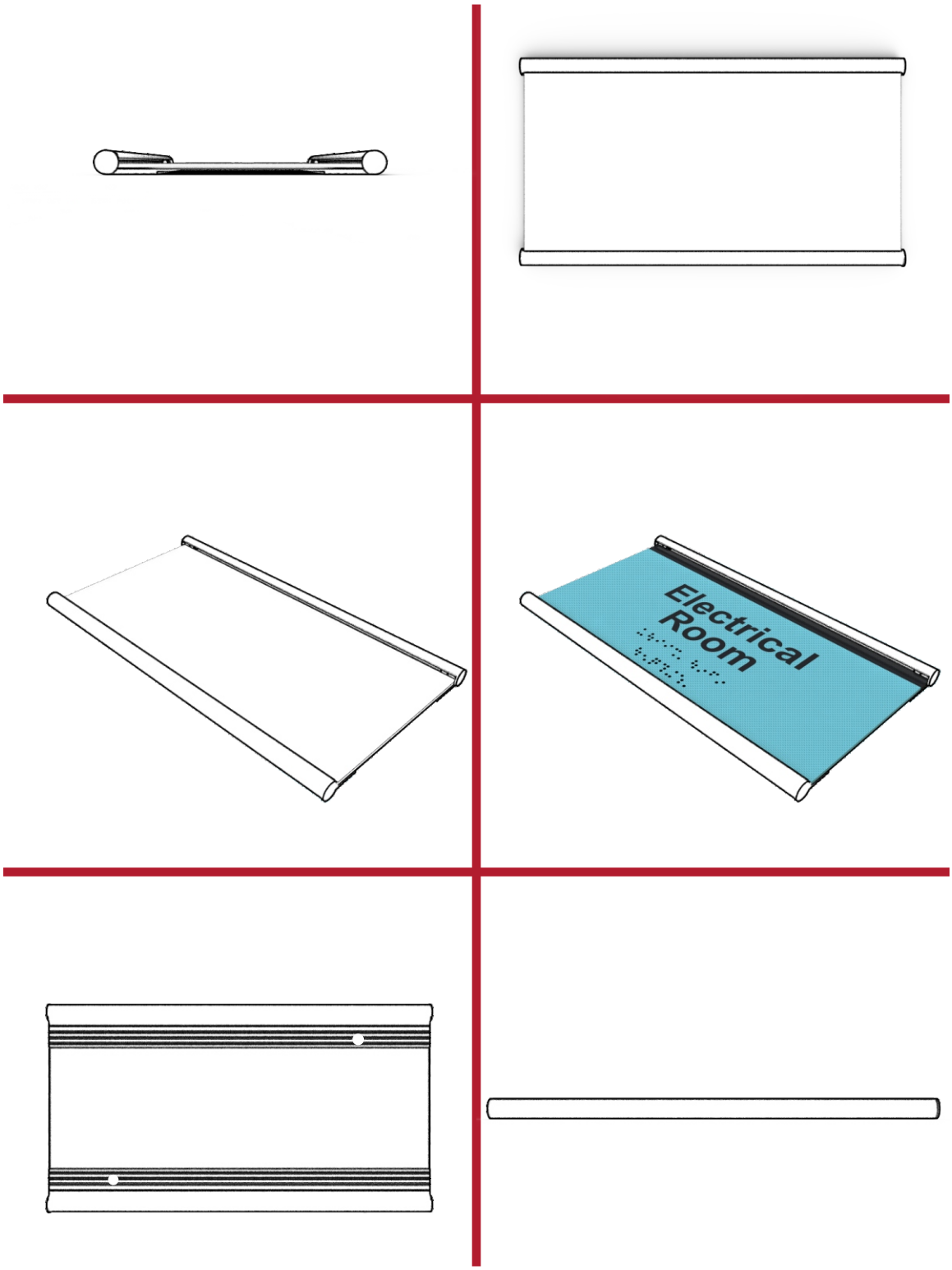
Electrical
Room

IN150 x 8" sign frame

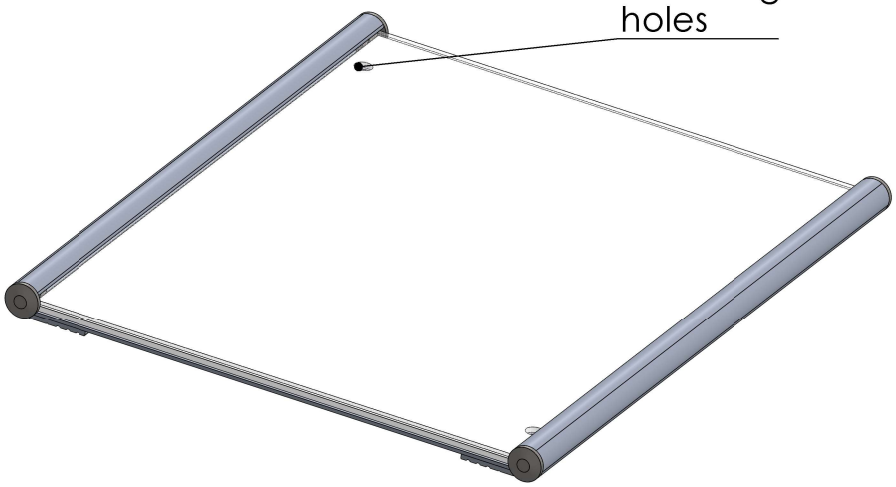

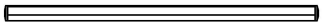

Top vew

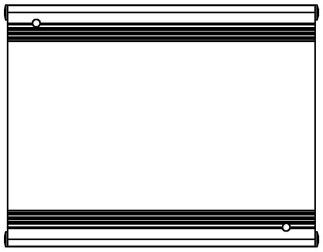

Back side

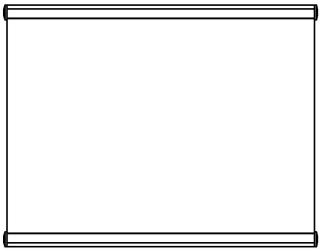

Front view

Side view

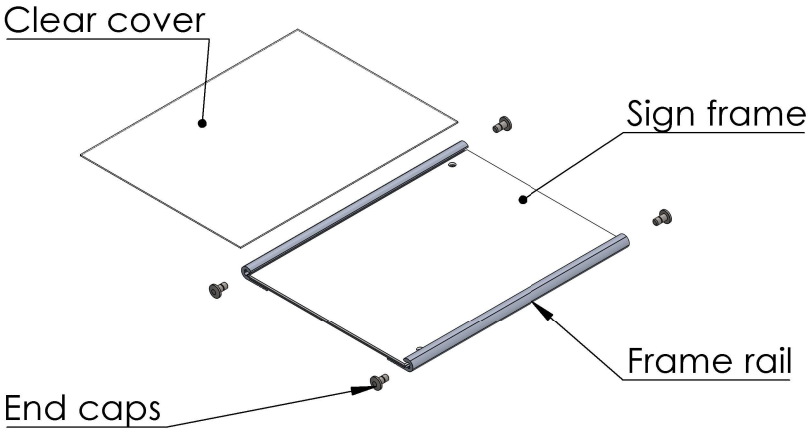

		DIMENSIONS ARE IN INCHES TOLERANCES: FRACTIONAL ± ANGULAR: MACH ± BEND ± TWO PLACE DECIMAL ± THREE PLACE DECIMAL ±		NAME	DATE
			DRAWN		
			CHECKED		
			ENG APPR.		
			MFG APPR.		
		MATERIAL	Q.A.		
			COMMENTS:		
NEXT ASSY	USED ON	FINISH			
APPLICATION		DO NOT SCALE DRAWING			

PROPRIETARY AND CONFIDENTIAL

THE INFORMATION CONTAINED IN THIS DRAWING IS THE SOLE PROPERTY OF <COMPANY NAME >. ANY REPRODUCTION IN PART OR AS A WHOLE WITHOUT THE WRITTEN PERMISSION OF <COMPANY NAME> IS PROHIBITED.

SIZE	DWG. NO.	REV.
A	In150 Room ID Landscape	
SCALE:1:5	WEIGHT:	SHEET 1 OF 1

RASTER® METHOD OF BRAILLE

Raster® Braille benefits:

- *Easy to read, perfectly rounded, uniform Braille dots*
- *Looks great*
- *Dome-shaped Raster® spheres meet current ADA and ANSI guidelines*
- *Durable and vandal resistant*

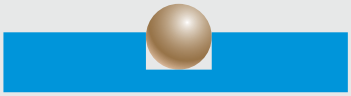

Insist on the clean look of Raster® Braille

The Raster® Method has quickly become the preferred process for producing ADA-compliant Braille. Fabrication is fast and easy, and the perfectly rounded Braille dots have a clean uniform appearance. Raster® Braille can be used in almost any material, allowing greater flexibility in choice of material substrates as well as design options.

Features:

- Raster® Braille meets all of the latest federal ADA guidelines for dot dimension, spacing, height, and shape.
- Raster® Braille complies with ANSI A117.1.
- Raster® Braille complies with California Title 24 standards.
- Raster® Braille is weatherproof in almost any environment.
- Raster® Braille is attractive in appearance and easy to read.

Colors and Materials:

Raster® spheres are available in UV-stable acrylic. Use clear Raster® spheres for practically invisible Braille, or use a contrasting color and the Braille becomes a design element. Raster® spheres are available in the following materials and colors:

- Black acrylic
- White acrylic
- Clear acrylic

The Raster® Method is a licensed, patented process.

Raster® Method Braille Process

Raster® Braille meets the most recent Standards for The Accessible Canada Act and U.S.A. Federal standards

Tactile characters must be accompanied by Grade 2 Braille.

- Braille shall have a domed or rounded shape.
- Braille shall be located below corresponding text.
- If text is multi-lined, Braille shall be placed below the entire text.
- Braille shall be separated by 3/8 inch (9.5 mm) minimum from tactile characters, raised borders, or decorative elements.
- Braille is required to be lowercase. The indication of uppercase letter(s) shall only be used for proper nouns and names, individual letters of the alphabet, initials, acronyms, or before the first word of sentences.
- Dot Height: 0.025-0.037 inch (0.6-0.9 mm)
- Dot base diameter: 0.059-0.063 inch (1.5-1.6 mm)
- Distance between any two dots in same cell, center to center: 0.090-0.100 inch (2.3-2.5 mm)
- Distance between corresponding dots in adjacent cells, center to center: 0.241-0.300 inch (6.1-7.6 mm)
- Distance between corresponding dots from one cell to the cell directly below, center to center: 0.395-0.400 inch (10.0-10.2 mm)

IMPORTANT CONSIDERATIONS:
When producing signs, the Braille message should accurately represent the tactile message. Spacing changes the meaning of letters and numbers. It is important to use an accurate translator such as the Duxbury Braille Translator. It is also very important to proofread the Braille translation to ensure accuracy.

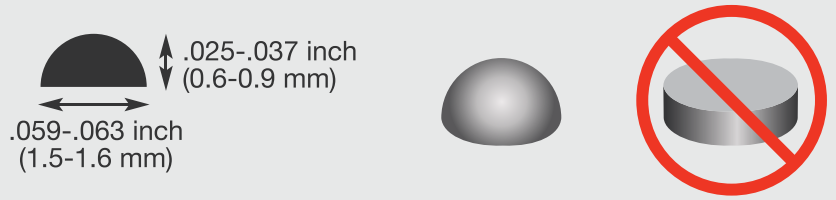

Braille dots shall have a domed or rounded shape.

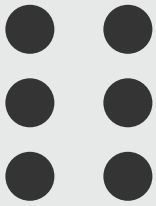

Braille is made up of cells. Each cell contains six dots; three on the left and three on the right. They are numbered one through six as shown here. It is essential that the dots are uniform in size and in the appropriate position in order for the Braille reader to understand the message.

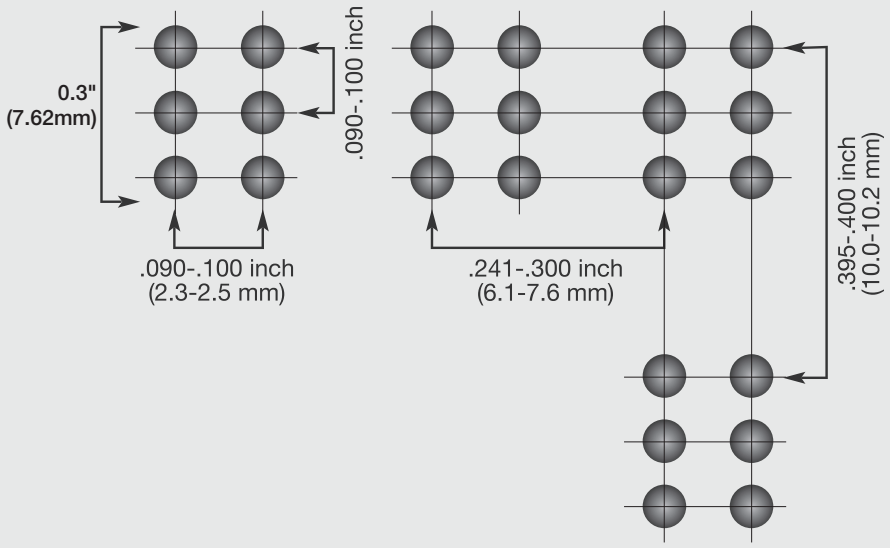

RASTER® BRAILLE MEETS THE LATEST U.S.A. STANDARDS

STANDARDS	Dot Shape	Dot Height	Dot Base Diameter	Inter-cell Spacing	Cell to cell Spacing
2010 ADA (ADAAG)	✔	✔	✔	✔	✔
ANSI A117.1	✔	✔	✔	✔	✔
California Title 24	✔	✔	✔	✔	✔

Raster® Braille complies with all current federal ADA standards (ADAAG), building code standards (ANSI), as well as California Title 24 standards.

The Raster® Method of Braille can be used with any computerized sign engraving or routing system that includes a Grade 2 Braille translator and a single-point drill function. For more information on producing Raster® Braille, contact us at 612-377-9156.

Product Guide

INFINITY Series Sign Frame with Removable Clear cover Portrait & Landscape

16 Infinity frame widths available and custom cut to suit your message schedule and project details.
Frames can be orientated with curve running either horizontal (portrait) or vertical (landscape).
Braille & tactile compatible with all frames larger than our IN120.
Variety of end cap and base plates available for desk top, cubical, projecting or free standing applications.

Portrait Format:
End caps top & bottom of sign frame horizontal curve

IN150 x 6" sign frame

IN150 x 6" d/s projecting

Landscape Format:
End caps on both sides of sign frame vertical curve

IN150 x 6" sign frame

IN150 x 6" d/s projecting

Extrusion Style	Extrusion Width	Insert Size
IN40	**1.98”/50mm**	1.45”/37mm
IN60	**2.75”/70mm**	2.26”/58mm
IN80	**3.54”/90mm**	3.05”/78mm
IN100	**4.41”/110mm**	3.88”/98mm
IN120	**5.12”/130mm**	4.61”/117mm
IN150	**6.30”/140mm**	5.78”/147mm
IN200	**8.27”/210mm**	7.72”/196mm
IN-Letter	**9.06”/230mm**	8.50”/217mm
IN11	**11.51”/293mm**	11”/279mm
IN300	**12.24”/310mm**	11.69”/297mm
IN14	**14.25”/362mm**	14”/356mm
IN400	**15.87”/410mm**	15.61”/397mm
IN17	**17.24”438mm**	17”/432mm
IN500	**19.84”/510mm**	19.59”/498mm
IN22	**22.24”/565mm**	22”/559mm
IN600	**23.78”/605mm**	23.52”/598mm